9.0 SCALED 727 DRAWINGS

THIS PAGE INTENTIONALLY LEFT BLANK

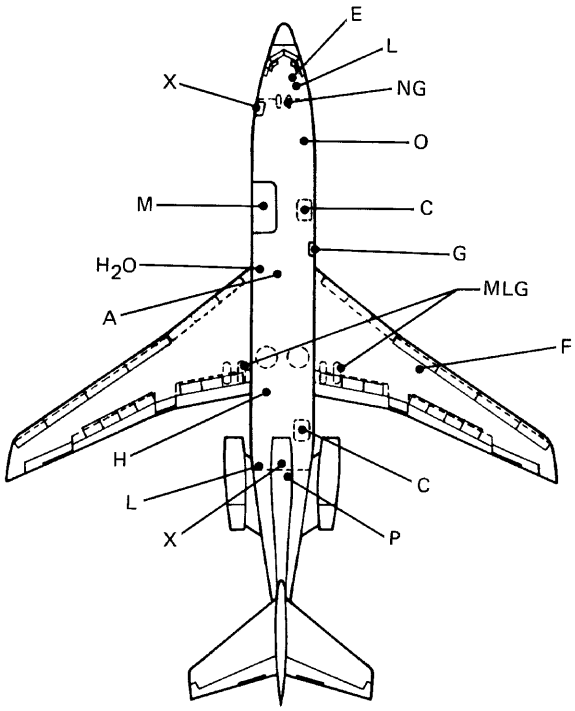

LEGEND	
A	AIR CONDITIONING
C	CARGO DOOR
E	ELECTRICAL
F	FUEL
G	GALLEY DOOR
H	HYDRAULIC CONNECTION
H_2O	POTABLE WATER
L	LAVATORY
M	MAIN-DECK CARGO DOOR (-100C)
MLG	MAIN LANDING GEAR
NG	NOSE GEAR
O	OXYGEN
P	PNEUMATIC (AIR START)
X	PASSENGER DOOR

NOTE: FOR TURNING RADIUS DATA SEE PAGES 57 THRU 59.

SCALED DRAWING—1 IN. = 32 FT
MODELS 727-100, -100C

THIS PAGE INTENTIONALLY LEFT BLANK

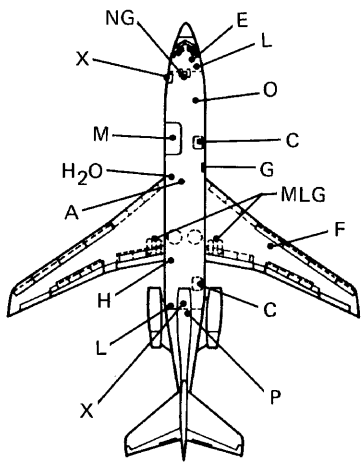

LEGEND	
A	AIR CONDITIONING
C	CARGO DOOR
E	ELECTRICAL
F	FUEL
G	GALLEY DOOR
H	HYDRAULIC CONNECTION
H_2O	POTABLE WATER
L	LAVATORY
M	MAIN-DECK CARGO DOOR (-100C)
MLG	MAIN LANDING GEAR
NG	NOSE GEAR
O	OXYGEN
P	PNEUMATIC (AIR START)
X	PASSENGER DOOR

NOTE: FOR TURNING RADIUS DATA SEE PAGES 57 THRU 59.

SCALED DRAWING—1 IN. = 50 FT
MODELS 727-100, -100C

THIS PAGE INTENTIONALLY LEFT BLANK

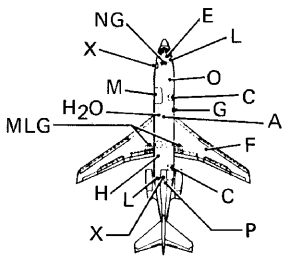

LEGEND	
A	AIR CONDITIONING
C	CARGO DOOR
E	ELECTRICAL
F	FUEL
G	GALLEY DOOR
H	HYDRAULIC CONNECTION
H_2O	POTABLE WATER
L	LAVATORY
M	MAIN-DECK CARGO DOOR (-100C)
MLG	MAIN LANDING GEAR
NG	NOSE GEAR
O	OXYGEN
P	PNEUMATIC (AIR START)
X	PASSENGER DOOR

NOTE: FOR TURNING RADIUS DATA SEE PAGES 57 THRU 59.

SCALED DRAWING—1 IN. = 100 FT
MODELS 727-100, -100C

THIS PAGE INTENTIONALLY LEFT BLANK

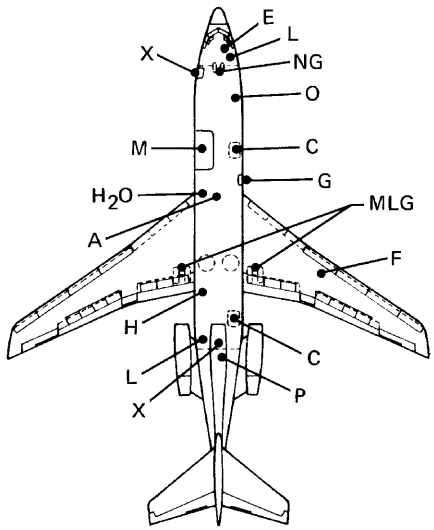

LEGEND	
A	AIR CONDITIONING
C	CARGO DOOR
E	ELECTRICAL
F	FUEL
G	GALLEY DOOR
H	HYDRAULIC CONNECTION
H_2O	POTABLE WATER
L	LAVATORY
M	MAIN-DECK CARGO DOOR (-100C)
MLG	MAIN LANDING GEAR
NG	NOSE GEAR
O	OXYGEN
P	PNEUMATIC (AIR START)
X	PASSENGER DOOR

NOTE: FOR TURNING RADIUS DATA SEE PAGES 57 THRU 59.

SCALED DRAWING—1 TO 500
MODELS 727-100, -100C

THIS PAGE INTENTIONALLY LEFT BLANK

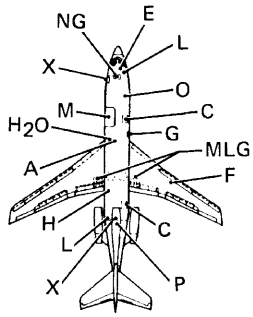

LEGEND	
A	AIR CONDITIONING
C	CARGO DOOR
E	ELECTRICAL
F	FUEL
G	GALLEY DOOR
H	HYDRAULIC CONNECTION
H_2O	POTABLE WATER
L	LAVATORY
M	MAIN-DECK CARGO DOOR (-100C)
MLG	MAIN LANDING GEAR
NG	NOSE GEAR
O	OXYGEN
P	PNEUMATIC (AIR START)
X	PASSENGER DOOR

NOTE: FOR TURNING RADIUS DATA SEE PAGES 57 THRU 59.

SCALED DRAWING—1 TO 1,000
MODELS 727-100, -100C

THIS PAGE INTENTIONALLY LEFT BLANK

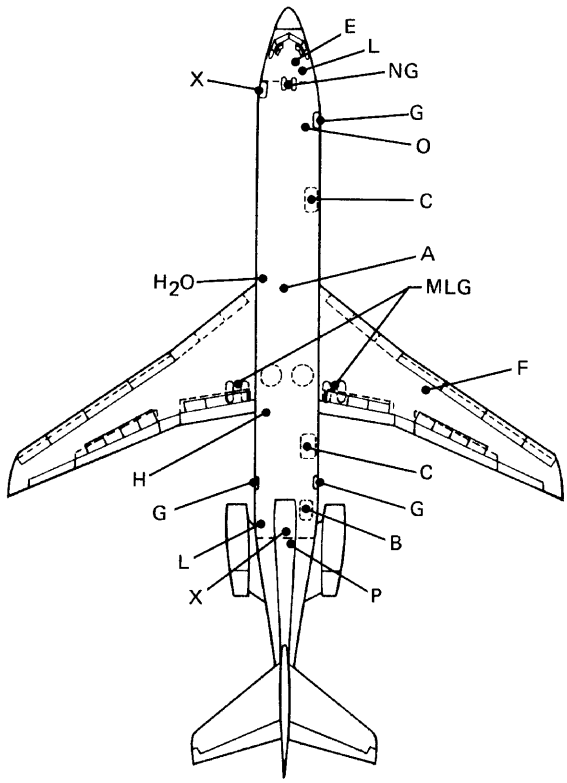

LEGEND

A	AIR CONDITIONING
B	BULK CARGO DOOR
C	CARGO DOOR
E	ELECTRICAL
F	FUEL
G	GALLEY DOOR
H	HYDRAULIC CONNECTION
H_2O	POTABLE WATER
L	LAVATORY
MLG	MAIN LANDING GEAR
NG	NOSE GEAR
O	OXYGEN
P	PNEUMATIC (AIR START)
X	PASSENGER DOOR

NOTE: FOR TURNING RADIUS DATA SEE PAGES 57 THRU 59.

SCALED DRAWING—1 IN. = 32 FT
MODEL 727-200

THIS PAGE INTENTIONALLY LEFT BLANK

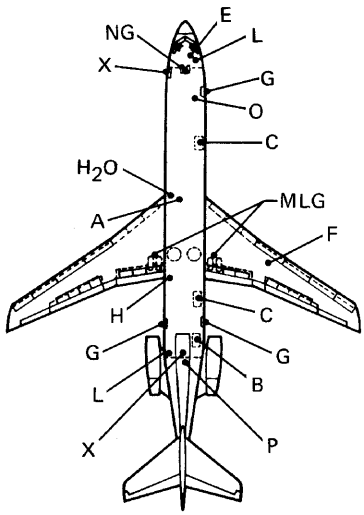

LEGEND	
A	AIR CONDITIONING
B	BULK CARGO DOOR
C	CARGO DOOR
E	ELECTRICAL
F	FUEL
G	GALLEY DOOR
H	HYDRAULIC CONNECTION
H_2O	POTABLE WATER
L	LAVATORY
MLG	MAIN LANDING GEAR
NG	NOSE GEAR
O	OXYGEN
P	PNEUMATIC (AIR START)
X	PASSENGER DOOR

NOTE: FOR TURNING RADIUS DATA SEE PAGES 57 THRU 59.

SCALED DRAWING—1 IN. = 50 FT
MODEL 727-200

THIS PAGE INTENTIONALLY LEFT BLANK

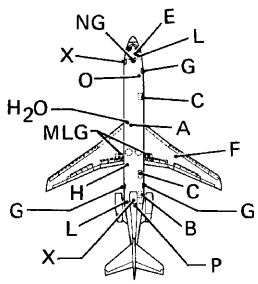

LEGEND	
A	AIR CONDITIONING
B	BULK CARGO DOOR
C	CARGO DOOR
E	ELECTRICAL
F	FUEL
G	GALLEY DOOR
H	HYDRAULIC CONNECTION
H_2O	POTABLE WATER
L	LAVATORY
MLG	MAIN LANDING GEAR
NG	NOSE GEAR
O	OXYGEN
P	PNEUMATIC (AIR START)
X	PASSENGER DOOR

NOTE: FOR TURNING RADIUS DATA SEE PAGES 57 THRU 59.

SCALED DRAWING—1 IN. = 100 FT
MODEL 727-200

THIS PAGE INTENTIONALLY LEFT BLANK

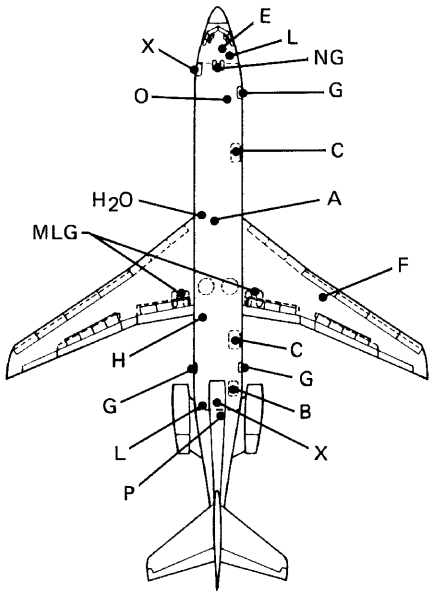

LEGEND	
A	AIR CONDITIONING
B	BULK CARGO DOOR
C	CARGO DOOR
E	ELECTRICAL
F	FUEL
G	GALLEY DOOR
H	HYDRAULIC CONNECTION
H_2O	POTABLE WATER
L	LAVATORY
MLG	MAIN LANDING GEAR
NG	NOSE GEAR
O	OXYGEN
P	PNEUMATIC (AIR START)
X	PASSENGER DOOR

NOTE: FOR TURNING RADIUS DATA SEE PAGES 57 THRU 59.

SCALED DRAWING—1 TO 500
MODEL 727-200

THIS PAGE INTENTIONALLY LEFT BLANK

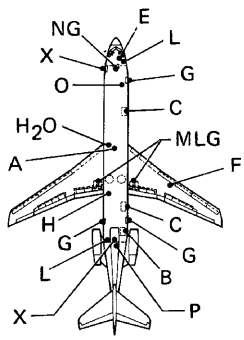

LEGEND	
A	AIR CONDITIONING
B	BULK CARGO DOOR
C	CARGO DOOR
E	ELECTRICAL
F	FUEL
G	GALLEY DOOR
H	HYDRAULIC CONNECTION
H_2O	POTABLE WATER
L	LAVATORY
MLG	MAIN LANDING GEAR
NG	NOSE GEAR
O	OXYGEN
P	PNEUMATIC (AIR START)
X	PASSENGER DOOR

NOTE: FOR TURNING RADIUS DATA SEE PAGES 57 THRU 59.

SCALED DRAWING—1 TO 1,000
MODEL 727-200

THIS PAGE INTENTIONALLY LEFT BLANK